FUTURISTIC FITTINGS

Plot No. 11, 2nd Floor,
Furniture Block,
Kirti Nagar,
New Delhi-110015, INDIA

www.neeva.in

Call us (+91) 92890-37900

Customer Care : 011-45669303

Whatspp at : Call us (+91) 99100-96312

E-Mail Address : inquiry@neeva.in

Follow us at :

EXCELLENCE IN VALUE COMMITMENTS

PREMIUM QUALITY FURNITURE & KITCHEN FITTINGS.

FUTURISTIC FITTINGS

LIMITED EDITION

WWW.NEEVA.IN

FUTURISTIC FITTINGS

In Pursuit of Excellence

Our mission is to produce value added products of utmost standard for quality conscious global markets by utilising the best available knowledge and technology.

In pursuit for global excellence, we have an in-house facility to achieve a consistent and competitive quality products. This platform ensures quality at every process stage to yield the desirable product.

Besides, Neeva Overseas firmly believes in utilizing the best available human resources, in order to achieve its mission, Neeva Overseas is a team of highly skilled dedicated employees involved in designing, developing and manufacturing.

The Neeva Edge

Neeva Overseas want to earn repute, more than money. No wonder, the dedication for quality runs through every member here.

The uncompromising attitude in quality matters has been acknowledge by even our peers. For we know, meeting the global standard is the pre-requisite to be a global player. And setting a new benchmark an attitude of the winner.

Adherence to the deadline is a habit at Neeva Overseas. For we have clear goals-to be the leading manufacturing & trading for furniture fittings, to set new international trends with our innovation and to ensure utmost customer satisfaction.

neeva
FUTURISTIC FITTINGS

THE VINTAGE COLLECTION®

SLIDE
SERIES

NEEVA NORMAL SLIDE

- Loading Capacity : **30kg**
- Material : Steel
- Finish: Zinc : Electrophoresis Black
- Length : 250-600mm
- Full Extension with Stoppers
- Thickness : 0.9 / 0.9 / 0.9mm
- Width : 45mm

Installation Dimensions

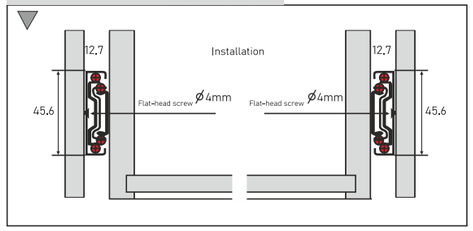

Item No.	Length	Travel	Hole Pattern							Packing (set/ctn)
			A	B	C	D	E	F	G	
45.73.10A	250	275.4	247.5	160			169			12
45.73.12A	300	325.4	297.5	224			96	128		12
45.73.14A	350	375.4	347.5			224	128	128		12
45.73.16A	400	425.4	397.5	224		288	128	192		12
45.73.18A	450	475.4	447.5	224	352		160	192		12
45.73.20A	500	525.4	497.5		352		192	224		12
45.73.22A	550	575.4	547.5	224	352	416	224	224		12
45.73.24A	600	625.4	597.5	224	352	480	224	288		12
45.73.26A	650	675.4	657.5	224	352	540	192	224	160	12
45.73.28A	700	725.4	697.5	384	512	576 224	192	224	192	12

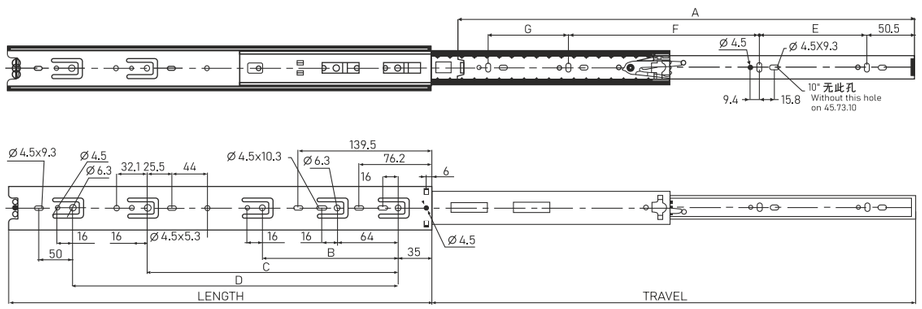

neeva
FUTURISTIC FITTINGS
LIMITED EDITION

NEEVA NORMAL SLIDE

- Loading Capacity : **45kg**
- Material : Steel
- Finish: Zinc : Electrophoresis Black
- Length : 250-600mm
- Full Extension with Stoppers
- Thickness : 1.2 / 1.2 / 1.5mm
- Width : 45mm

Installation Dimensions

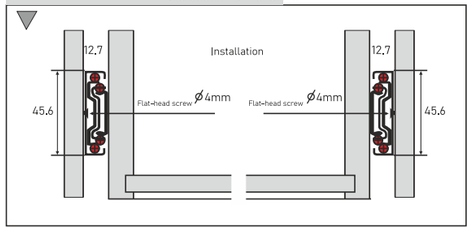

Item No.	Length	Travel	Hole Pattern							Packing (set/ctn)
			A	B	C	D	E	F	G	
45.73.10A	250	275.4	247.5	160			169			12
45.73.12A	300	325.4	297.5	224			96	128		12
45.73.14A	350	375.4	347.5			224	128	128		12
45.73.16A	400	425.4	397.5	224		288	128	192		12
45.73.18A	450	475.4	447.5	224	352		160	192		12
45.73.20A	500	525.4	497.5		352		192	224		12
45.73.22A	550	575.4	547.5	224	352	416	224	224		12
45.73.24A	600	625.4	597.5	224	352	480	224	288		12
45.73.26A	650	675.4	657.5	224	352	540	192	224	160	12
45.73.28A	700	725.4	697.5	384	512	576 224	192	224	192	12

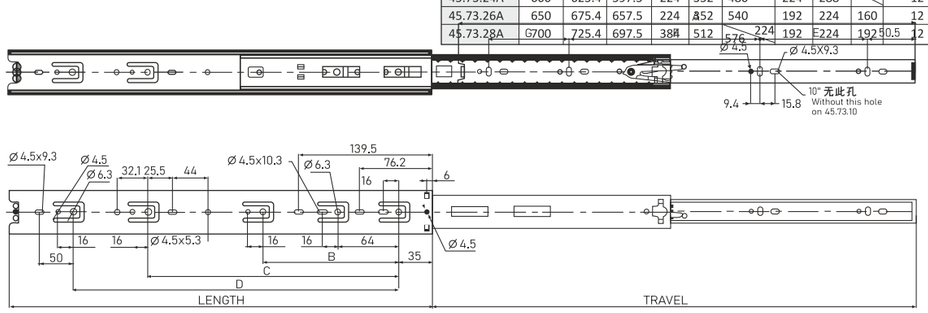

neeva
FUTURISTIC FITTINGS

THE VINTAGE COLLECTION®

SLIDE
SERIES

NEEVA PUSH OPEN SLIDE

- 32 Hole Pattern System,
  Side mounted full extension with trigger
- Load Capacity : 35kg
- Finish : Zinc Plated
- Length : 250-600mm
- Thickness : 1.2 / 1.2 / 1.5mm
- Full Extension with Stoppers
- Single Way Travel
- Width : 45mm

Installation Dimensions

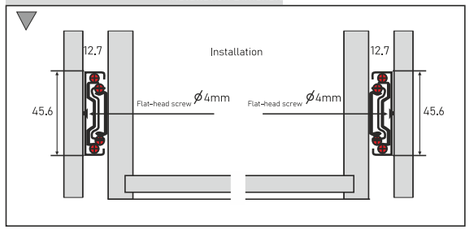

Item No.	Length	Travel	Hole Pattern							Packing (set/ctn)
			A	B	C	D	E	F	G	
45.73.10A	250	275.4	247.5	160			169			12
45.73.12A	300	325.4	297.5	224			96	128		12
45.73.14A	350	375.4	347.5			224	128	128		12
45.73.16A	400	425.4	397.5	224		288	128	192		12
45.73.18A	450	475.4	447.5	224	352		160	192		12
45.73.20A	500	525.4	497.5		352		192	224		12
45.73.22A	550	575.4	547.5	224	352	416	224	224		12
45.73.24A	600	625.4	597.5	224	352	480	224	288		12
45.73.26A	650	675.4	657.5	224	352	540	192	224	160	12
45.73.28A	700	725.4	697.5	384	512	576 / 224	192	224	192	12

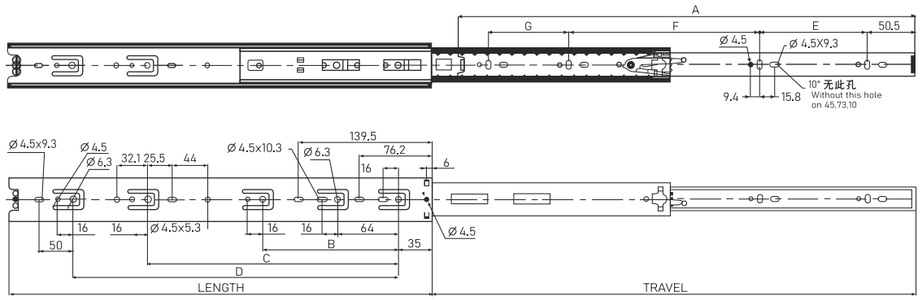

NEEVA SOFT CLOSING SLIDE

- 32 Hole Pattern System,
  Side mounted full extension with trigger
- Load Capacity : 35kg
- Finish : Zinc Plated
- Length : 250-600mm
- Thickness : 1.2 / 1.2 / 1.5mm
- Full Extension with Stoppers
- Single Way Travel
- Width : 45mm

Installation Dimensions

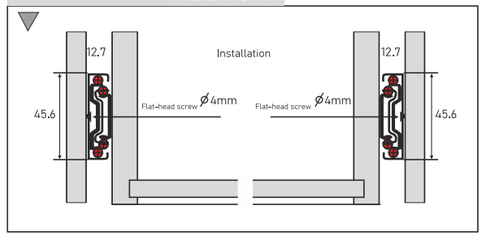

Item No.	Length	Travel	Hole Pattern							Packing (set/ctn)
			A	B	C	D	E	F	G	
45.73.10A	250	275.4	247.5	160			169			12
45.73.12A	300	325.4	297.5	224			96	128		12
45.73.14A	350	375.4	347.5			224	128	128		12
45.73.16A	400	425.4	397.5	224		288	128	192		12
45.73.18A	450	475.4	447.5	224	352		160	192		12
45.73.20A	500	525.4	497.5		352		192	224		12
45.73.22A	550	575.4	547.5	224	352	416	224	224		12
45.73.24A	600	625.4	597.5	224	352	480	224	288		12
45.73.26A	650	675.4	657.5	224	352	540	192	224	160	12
45.73.28A	700	725.4	697.5	384	512	576 / 224	192	224	192	12

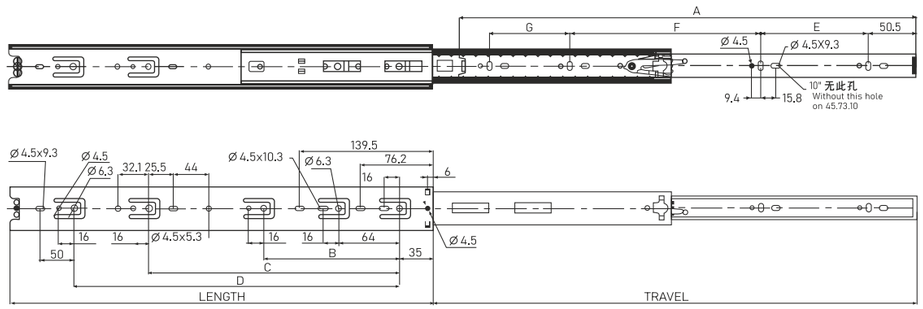

SAIRENTO
SERIES

NEEVA FULL EXTENSION SAIRENTO SYSTEM

- Load Capacity : 25kg
- Finish : Zinc Plated
- Lengths : 250-500mm
- Width : 1.8 / 1.4 / 1.0mm
- Full Extension
- Tool free assembly and removal of drawer
- Silent system guarantees smooth run without noise
- Drawer height adjustment 0~+3mm

Hole pattern

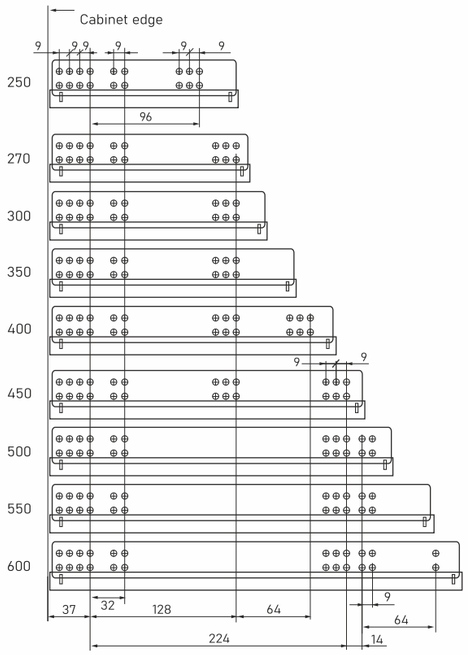

Installation Dimensions

SKW = Internal Drawer Width LW = Internal Cabinet Width

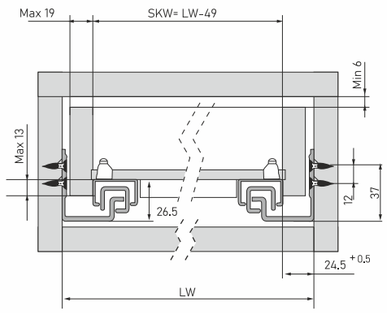

NEEVA PUSH TO OPEN SAIRENTO SYSTEM

- Load Capacity : 25kg
- Finish : Zink Plated
- Lengths : 250-500mm
- Width : 1.8 / 1.4 / 1.0mm
- Push Open
- Tool free assembly and removal of drawer
- Silent system guarantees smooth run without noise
- Drawer height adjustment 0~+3mm

Hole pattern

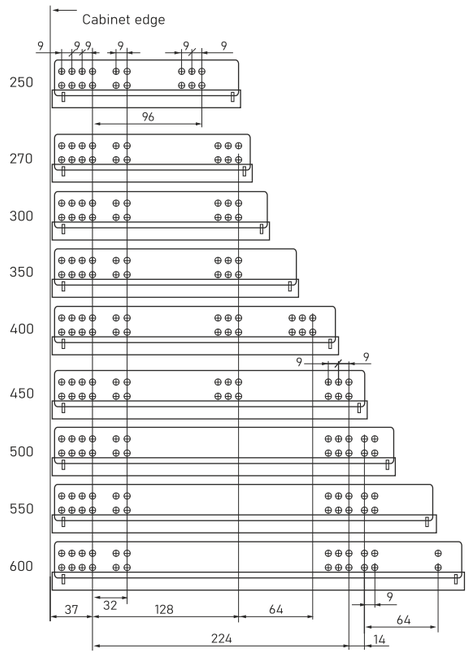

Installation Dimensions

SKW = Internal Drawer Width LW = Internal Cabinet Width

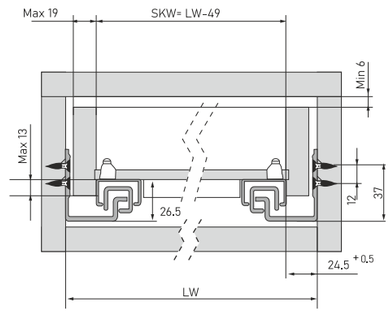

THE VINTAGE COLLECTION®

SAIRENTO
SERIES

NEEVA PARTIAL EXTENSION SAIRENTO SYSTEM

- Load Capacity : 25kg
- Finish : Zinc Plated
- Lengths : 250-500mm
- Partial Extension
- Tool free assembly and removal of drawer
- Silent system guarantees smooth run without noise
- Drawer Height Adjustment 0~+3mm

Hole pattern

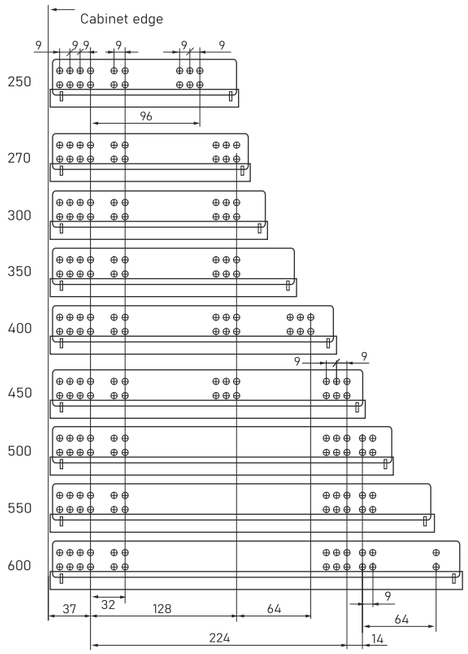

Installation Dimensions

SKW = Internal Drawer Width LW = Internal Cabinet Width

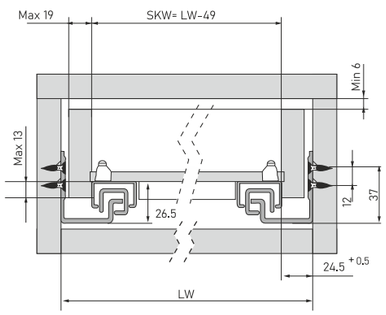

NEEVA BOTTOM MOUNT CHANNEL

- Thickness : As required
  0.9mm / 1mm / 1.2mm after painting
- Size : 10"-24"
- Capacity : 25kg
- Color : Ivory / White

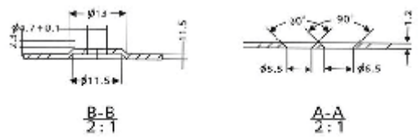

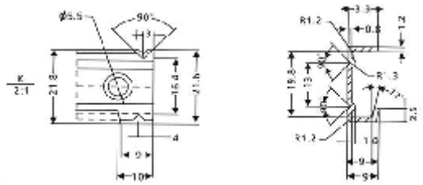

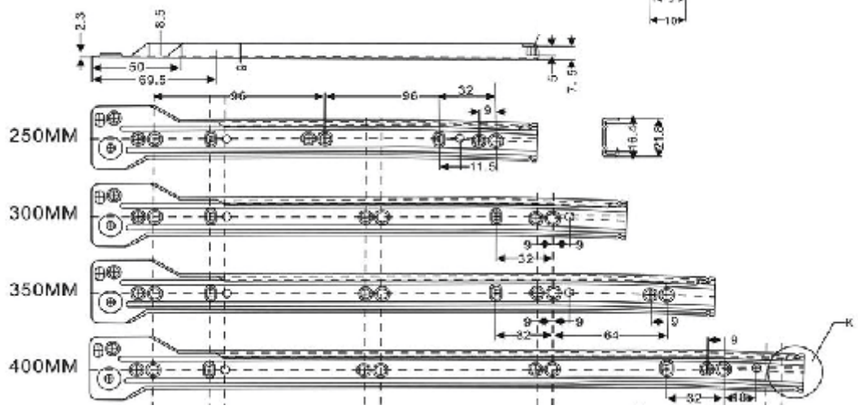

NEEVA NORMAL HINGE

- Opening angle : 110°
- Depth of hinge cup : 11.3mm
- Diameter of hinge cup : 35mm
- Possible drilling distances on the door(K) : 3-7mm
- Range of door thickness : 14-24mm

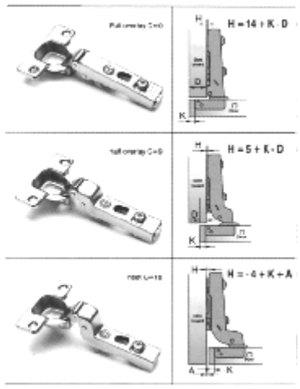

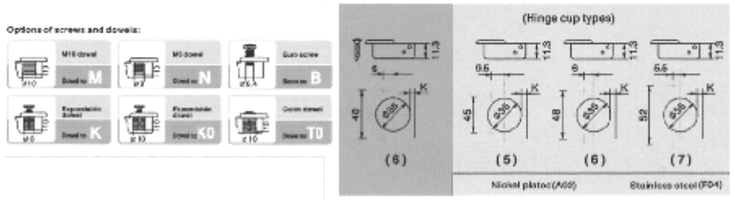

Series (slide-on) hinges 110°

	Item No.	Pair/ctn
Sprung	C89A276	100
Unsprung	A89A276	100
Push-open	F89A276	100

	Item No.	Pair/ctn
Sprung	C89B276	100
Unsprung	A89B276	100
Push-open	F89B276	100

	Item No.	Pair/ctn
Sprung	C89C276	100
Unsprung	A89C276	100
Push-open	F89C276	100

NEEVA SOFT CLOSE HINGE

- Opening angle : 110°
- Depth of hinge cup : 10mm
- Diameter of hinge cup : 35mm
- Possible drilling distances on the door(K) : 3-7mm
- Range of door thickness : 14-24mm

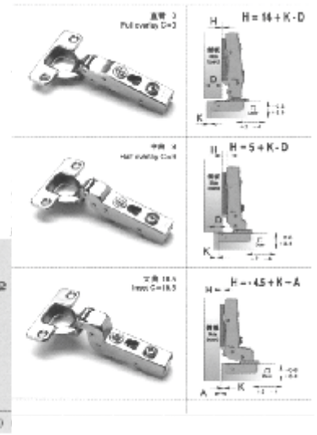

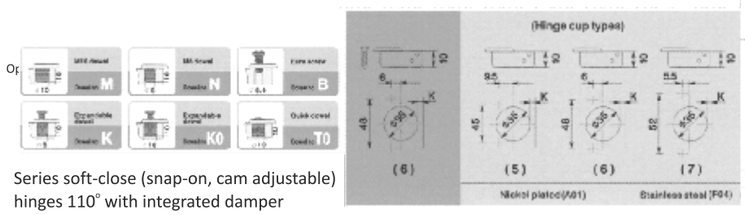

Series soft-close (snap-on, cam adjustable) hinges 110° with integrated damper

	Item No.	Pair/ctn
Soft-close	C85A6A6F	50
Sprung	C85A6A6	50
Unsprung	A85A6A6	50
Push-open	F85A6A6	50

	Item No.	Pair/ctn
Soft-close	C85B6A6F	50
Sprung	C85B6A6	50
Unsprung	A85B6A6	50
Push-open	F85B6A6	50

	Item No.	Pair/ctn
Soft-close	C85C6A6F	50
Sprung	C85C6A6	50
Unsprung	A85C6A6	50
Push-open	F85C6A6	50

neeva
FUTURISTIC FITTINGS

THE VINTAGE COLLECTION®

HINGE
SERIES

NEEVA THICK DOOR SOFT CLOSING HINGE

- Opening angle : 110°
- Depth of hinge cup : 10mm
- Diameter of hinge cup : 42mm
- Possible drilling distances on the door(K) : 3-7mm
- Range of door thickness : 24-40mm

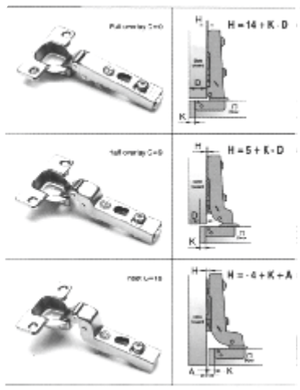

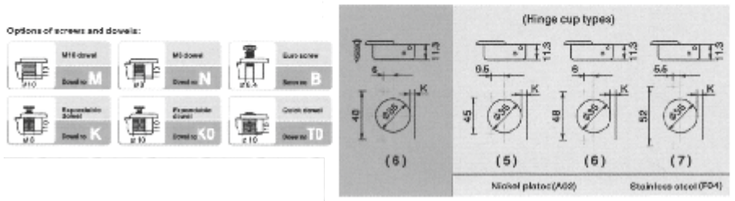

Series (slide-on) hinges 110°

	Item No.	Pair/ctn
Sprung	C89A276	100
Unsprung	A89A276	100
Push-open	F89A276	100

	Item No.	Pair/ctn
Sprung	C89B276	100
Unsprung	A89B276	100
Push-open	F89B276	100

	Item No.	Pair/ctn
Sprung	C89C276	100
Unsprung	A89C276	100
Push-open	F89C276	100

NEEVA THICK DOOR NORMAL HINGE

- Opening angle : 95°
- Depth of hinge cup : 12.1 mm
- Diameter of hinge cup : 40 mm
- Possible drilling distances on the door(K) : 3-15 mm
- Range of door thickness : 20-40 mm

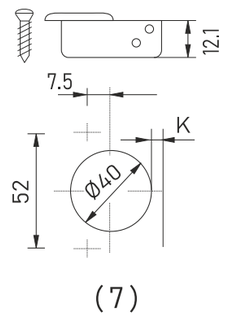

	Nickel plated(A02)		Stainless steel (F04)
		Item No.	Pcs/ctn
	Sprung	D98A697	200
	Unsprung	AD98A697	200
	Push-open	FD98A697	200
		Item No.	Pcs/ctn
	Sprung	D98B697	200
	Unsprung	AD98B697	200
	Push-open	FD98B697	200

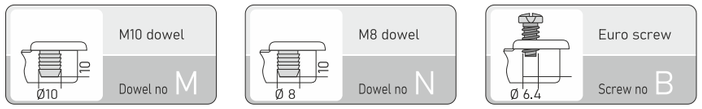

Series Ø40mm(snap-on,cam adjustable) hinges 95°

Inset C=22.5

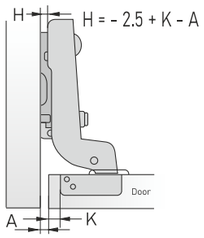

Half overlay C=9

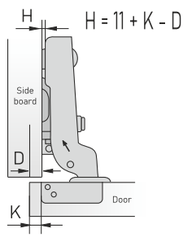

Full overlay C=0

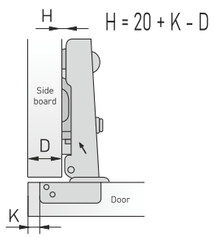

NEEVA CLIP-ON HIGH QUALITY GLASS HINGE WITH INTEGRATED DAMPENING. SENSYS.

- Opening angle : 110°
- Depth of hinge cup : 11mm
- Diameter of hinge cup : 35mm
- Possible drilling distances on the door(K) : 4-8mm
- Range of glass thickness : 4-6mm

Application case of ϕmm hinge
H=required door overlay
K=drilling distance from the edge of door to the edge of the hole
A=gap between door and side board

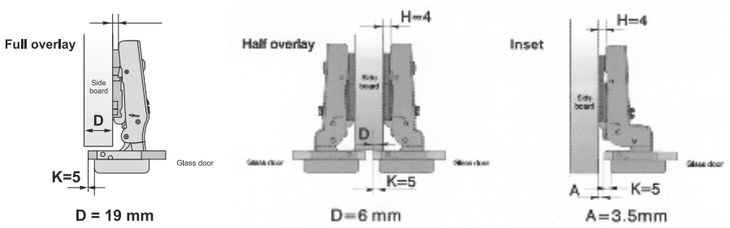

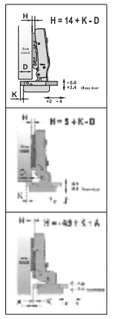

	Item No.	Pair/ctn
Soft-close	C85A6A0F	50
Sprung	C85A6A0	50
Unsprung	A85A6A0	50

	Item No.	Pair/ctn
Soft-close	C85B6A0F	50
Sprung	C85B6A0	50
Unsprung	A85B6A0	50

	Item No.	Pair/ctn
Soft-close	C85C6A0F	50
Sprung	C85C6A0	50
Unsprung	A85C6A0	50

NEEVA HIGH QUALITY HINGE 135°

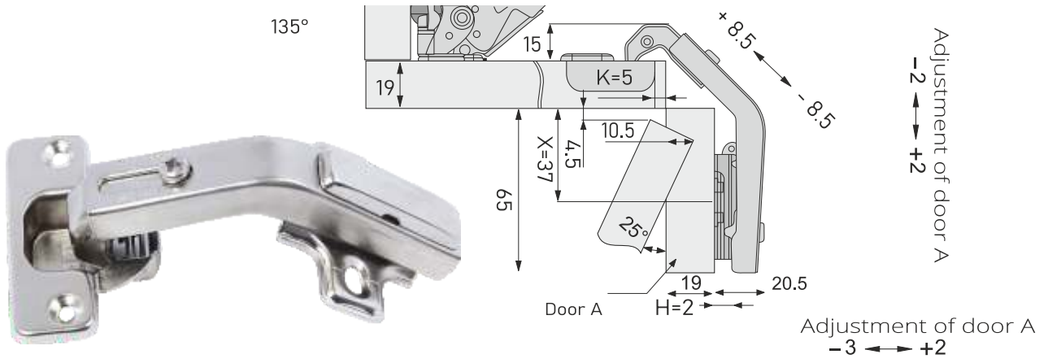

NEEVA FAST-ASSEMBLY CONCEALED HINGE

- Opening angle : 165°
- Depth of hinge cup : 11.3mm
- Diameter of hinge cup : 35mm
- Possible drilling distances on the door(K) : 3-8mm
- Range of door thickness : 14-26mm

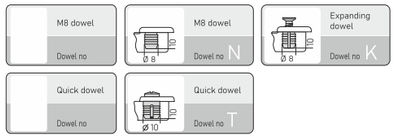

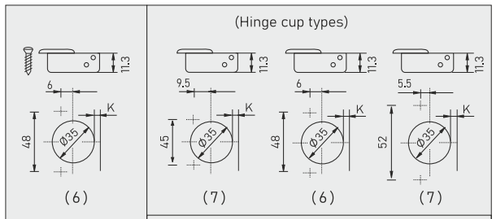

Series(snap-on, cam adjustable)hinges 165°

			Nickel plated(A02)		Stainless steel (F04)
Full overlay C=0	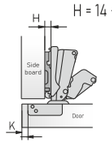 H = 14 + K - D			Item No.	Pcs/ctn
			Sprung	C98A606	100
			Unsprung	A98A606	100
Half overlay C=10	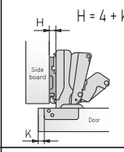 H = 4 + K - D			Item No.	Pcs/ctn
			Sprung	C98B606	100
			Unsprung	A98B606	100
Inset C=14	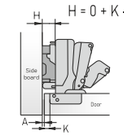 H = 0 + K - A			Item No.	Pcs/ctn
			Sprung	C98C606	100
			Unsprung	A98C606	100

NEEVA FAST-ASSEMBLY CONCEALED HINGE 90°

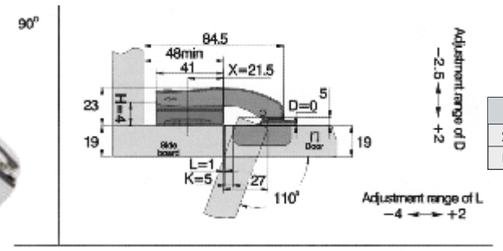

	Item No.	Pair/ctn
Sprung	C89J276	100
Unsprung	A89J276	100

NEEVA INVISIBLE HINGE

- Invisible Hinge, opening angle 180 degree
- Material : Zamac + Steel
- Finish : Chrome / Brass
- Size : **13x45**

- Invisible Hinge, opening angle 180 degree
- Material : SS+Zinc alloy
- Finish : Chrome / Brass
- Size : **13x60**

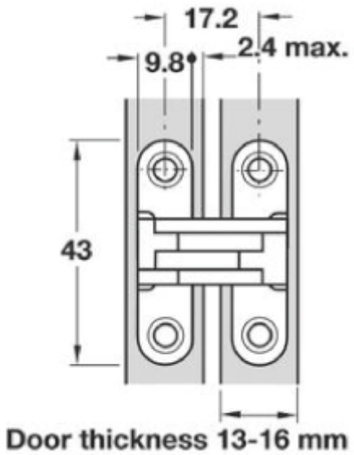

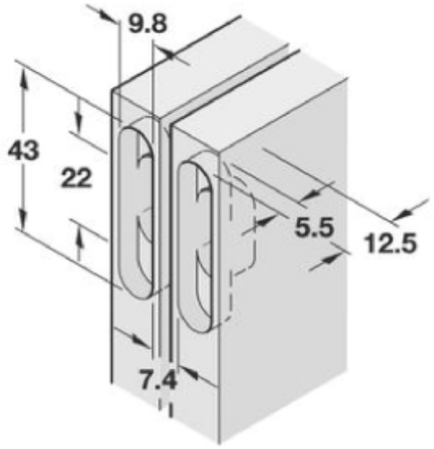

NEEVA TABLE EXTENSION

- Ball bearing table slide
- Size : 800mm – 1000mm
- Load Rating : 50kg(30")
- Material : 1.3mm Cold Board
- Finish : SS
- Color : Zinc
- Package : 10 Sets / Carton (without Screw)

THE VINTAGE COLLECTION®

LOCK SERIES

NEEVA MULTI DRAWER LOCK WITH METAL KEY

- Two Metal Key
- One Removable Key
- One Master Key
- 600 Key Combinations
- Length of Bar - 500mm

MASTER KEY

REMOVABLE KEY

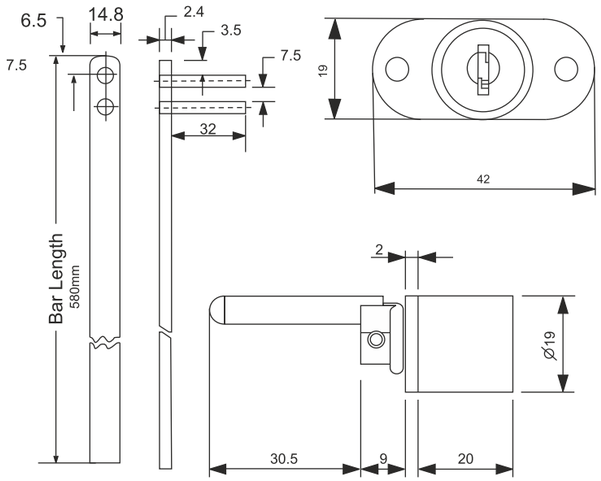

NEEVA MULTI DRAWER LOCK WITH NORMAL KEY

- 2 Copper Plastic Keys
- Length of Bar - 500mm

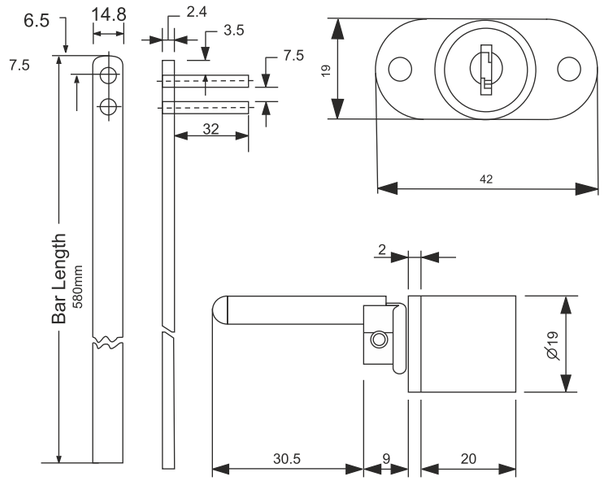

NEEVA DRAWER LOCK WITH WAVE KEY

- Two Wave Copper Key
- Diameter : 18x22mm

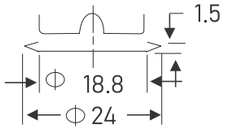

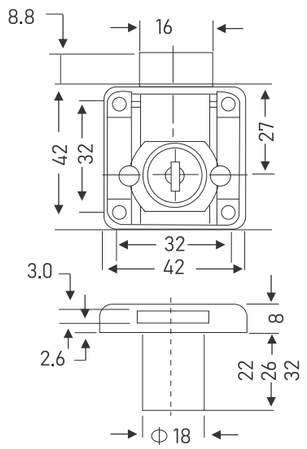

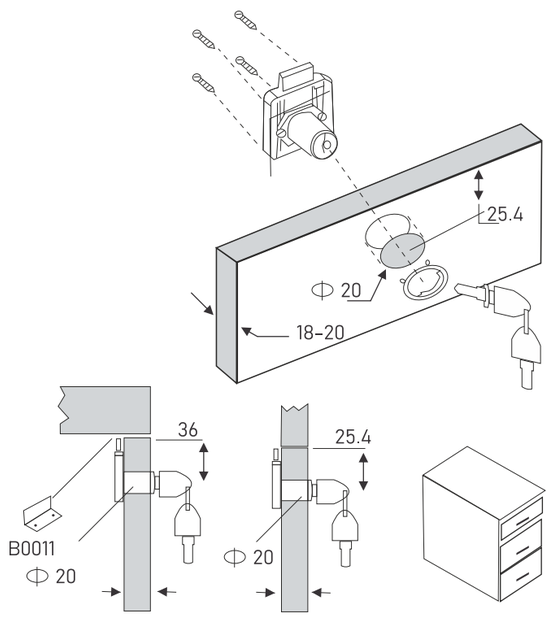

NEEVA PREMIUM DRAWER LOCK WITH METAL KEY

- 2 Copper Keys
- 600 Key Combinations
- One Removable Key
- One Master Key
- Diameter : 18x22mm

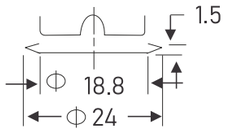

MASTER KEY

REMOVABLE KEY

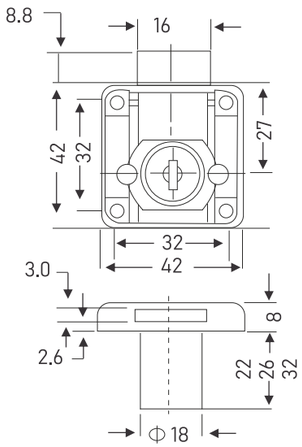

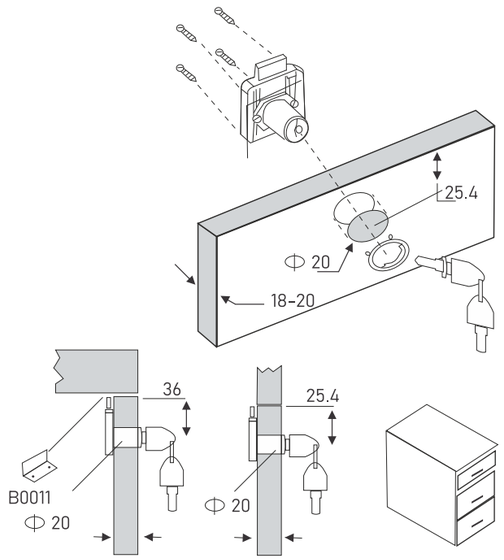

NEEVA DRAWER LOCK WITH PLASTIC KEY

- 2 Plastic Keys
  For Single Drawers
- Material : Iron
- Diameter : 18x22mm

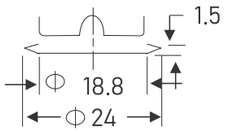

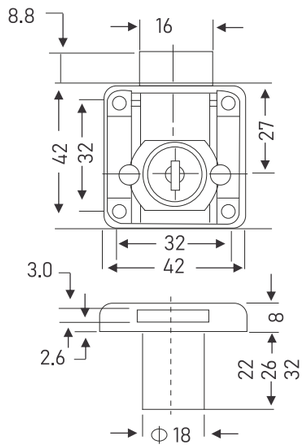

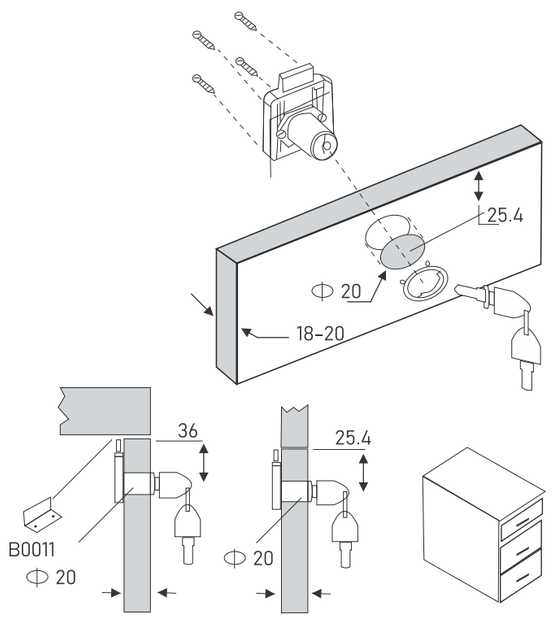

NEEVA NUMERIC LOCK

- Material : Plastic Body & Knob,
  Zinc Alloy Core, Steel Looking Pin
- Finish : Grey / Black Knob & Body
- Rotation : 180degree to Lock & Unlock

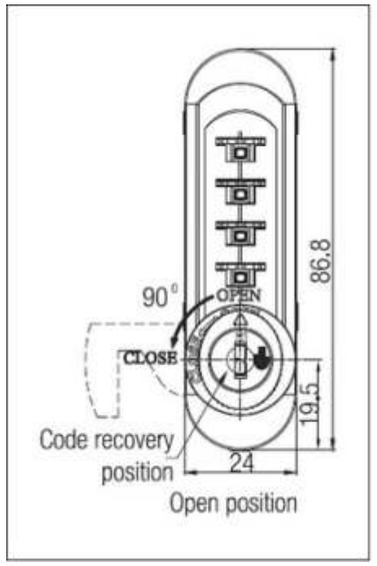

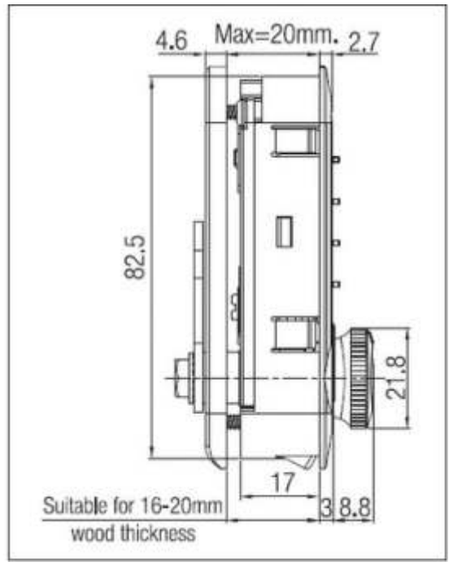

NEEVA MAGNETIC CATCHER

Magnetic Catcher Stainless Steel
Finish : SS
Size : Regular

NEEVA SS MAGMATIC CATCHER

Magnetic Catcher Antique
Finish : Antique
Size : Regular

NEEVA ANTIQUE MAGNETIC CATCHER

Magnetic Catcher Plastic
Finish : Brown
Size : Regular

NEEVA PLASTIC MAGNETIC CATCHER

NEEVA PUSH CATCHERS

NEEVA SQUARE PUSH CATCHER

NEEVA GREY PUSH CATCHER

NEEVA BLACK PUSH CATCHER

NEEVA METAL CATCHER

NEEVA SILVER PUSH CATCHER

NEEVA 10X10 ROUND MAGNET

- Size : 10x10
- Finish : SS
- Used in Cabinet

NEEVA SL MAGNATIC CATCHER

- Material : Stainless Steel
- Shape : Rectangular
- Surface : Flat
- Size : Big & Small
- Color : SS Finish

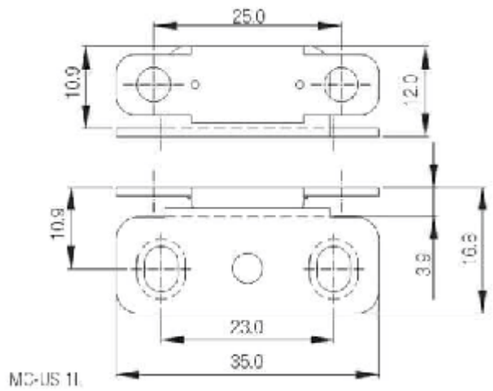

NEEVA MINIFIX

MINIFIX WITH TWO PIECE

MINIFIX WITH THREE PIECE

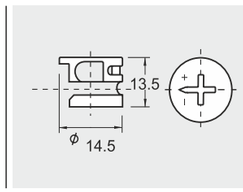

Material	Finish
Zinc-alloy	Nickel plated
Zinc-alloy	Zinc plated
Zinc-alloy	Nickel plated
Zinc-alloy with cover flange	Nickel plated

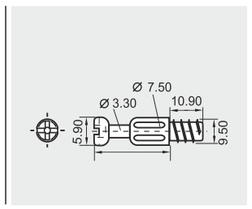

Material	Drilling distance
Plastic & steel	A=25
Plastic & steel	A=26
Plastic & steel	A=29
Plastic & steel	A=32
Plastic & steel	A=34

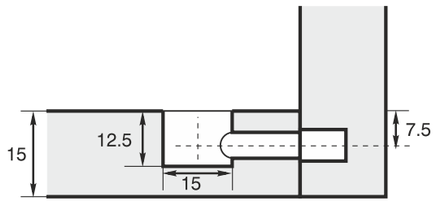

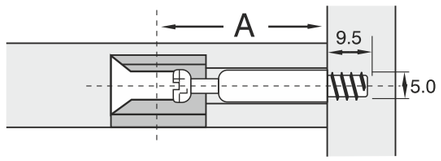

NEEVA DOOR SLIDING WHEEL

- Material : Mild steel, PVC parts
- Color : Zinc
- Load Capacity : 25kg
- Door Thickness : 18mm
- Packing : Single Door Kit (4 pieces)

- Material : Zinc Alloy and Nylon Wheel
- Load Capacity : 30kg
- Door Thickness : 18mm
- Packing : Single Door Kit (4 pieces)

NEEVA NORMAL LID STAY

- Fit for wood door or 20mm wide, Profile, oval handle
- Material : Zamac
- Nickel plated
- Door Weight : 6.0kg

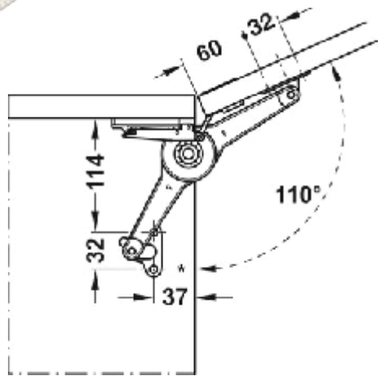

NEEVA ADJUSTABLE LID STAY

- Fit for wood door or 20mm wide, profile, flat handle
- Left and right version. Up and down distance adjustable
- Material : Steel + Zamac
- Finish : Chrome, Nickle Plated
- Door Weight : 9.0kg

NEEVA ANTI TIP LOCK

- Locks are surface mounted and easy to mount
- Material : Zinc + Plastic
- Finish : Nickel

Available for 2-6 drawer

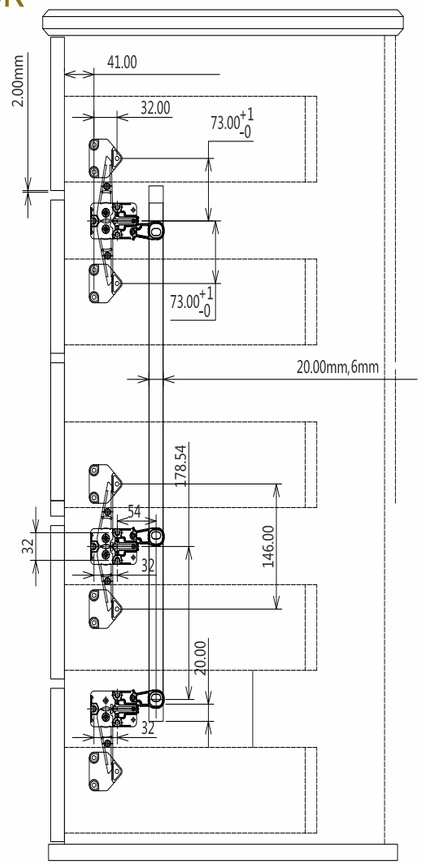

NEEVA SPRING HINGE

NEEVA WOODEN DOWEL

Size : 8x40mm
Uses : Connect Component

NEEVA GAS SPRING

- Model : Gas Spring
- Load Capacity : 10-12Kg
- Finish : Nickle

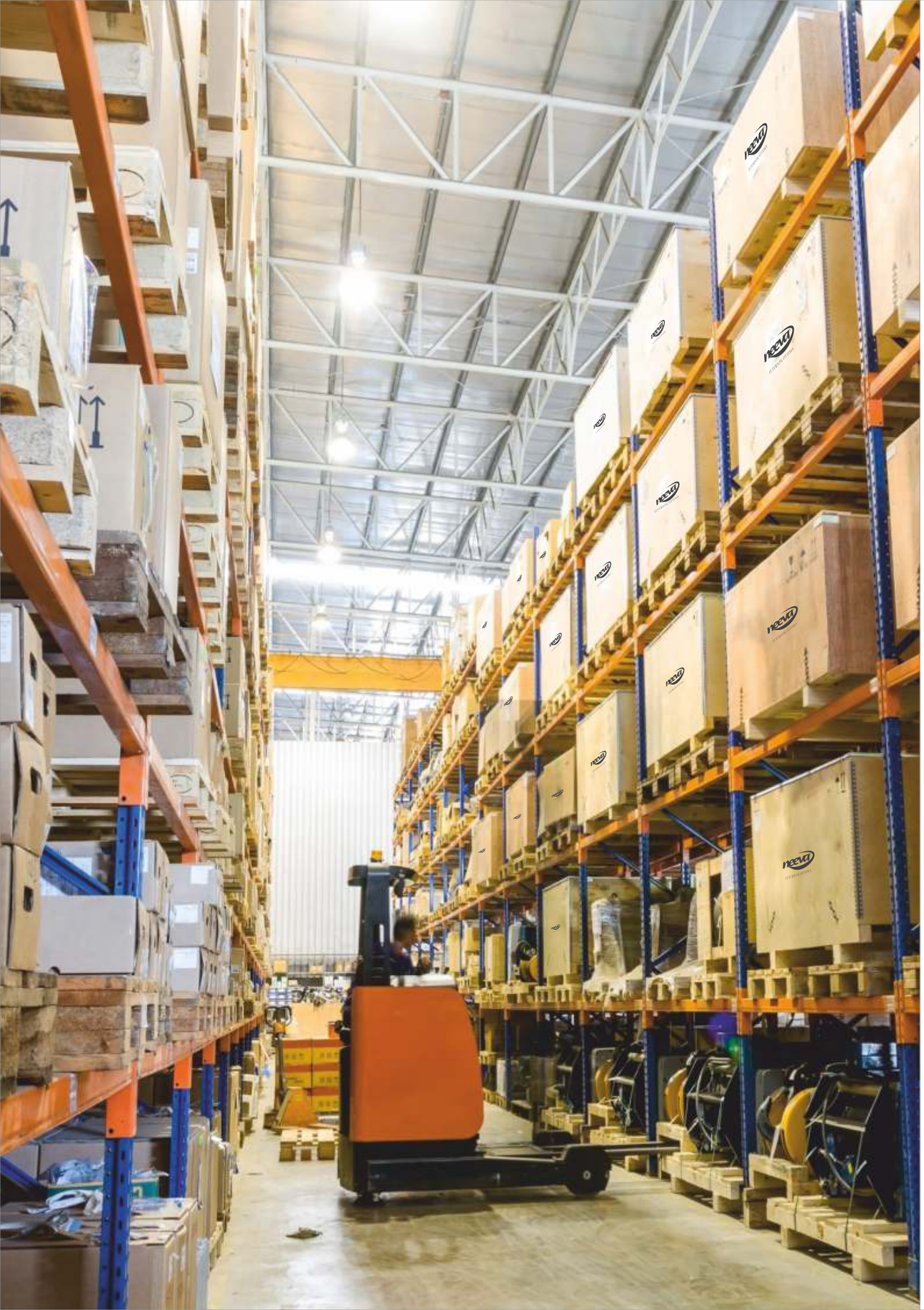

NOTES